DESIGN + ENGINEERING
GROHE GERMANY

99.846.331/ÄM 243983/01.19

www.grohe.com

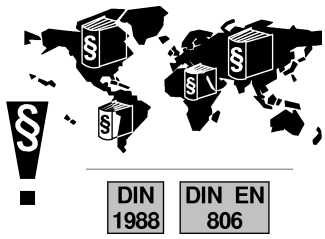

Pure Freude an Wasser

GROHE

26 634

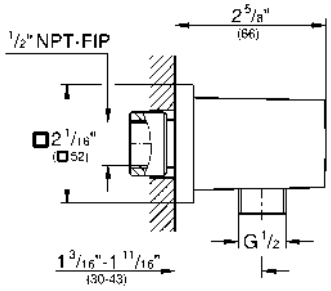

27 704

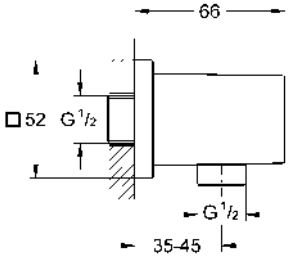

27 707

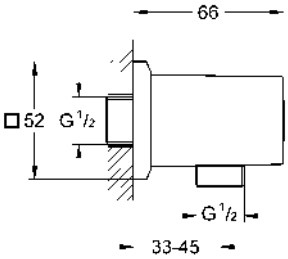

27 708

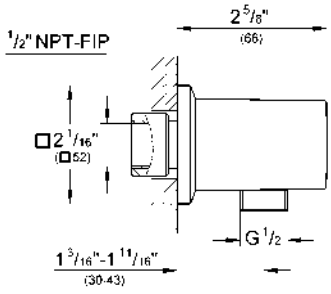

1

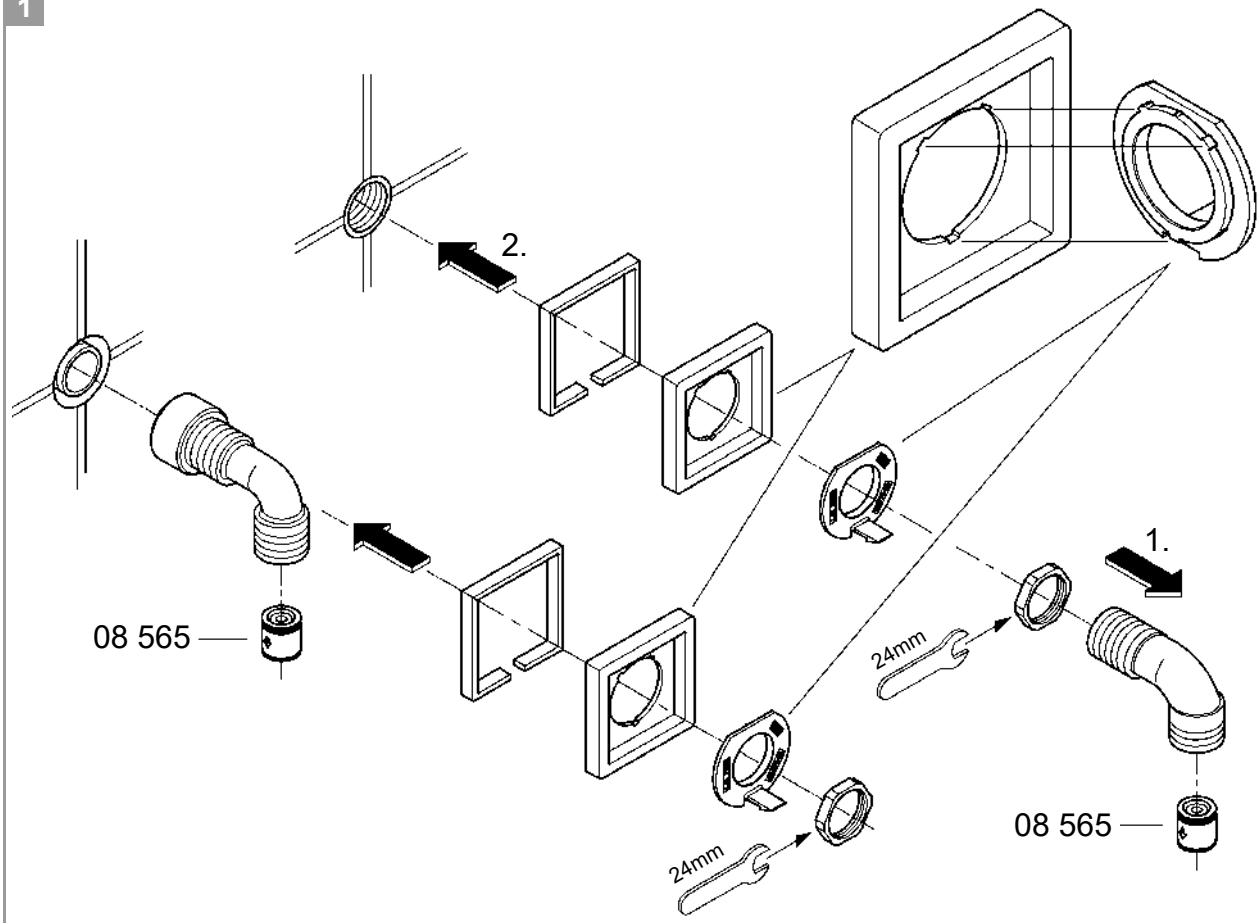

2

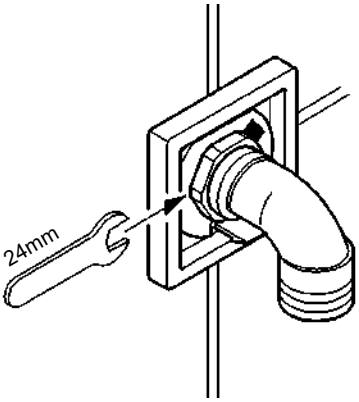

3

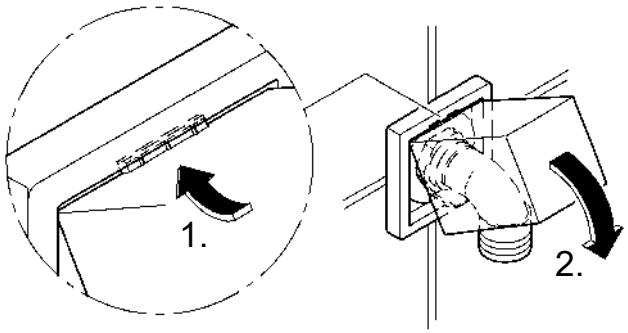

26 396
27 693

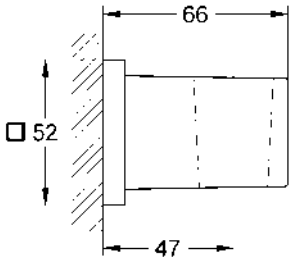

27 706

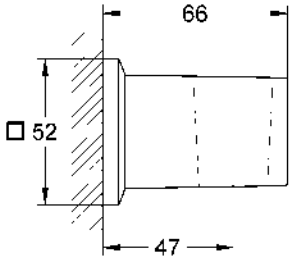

26 370

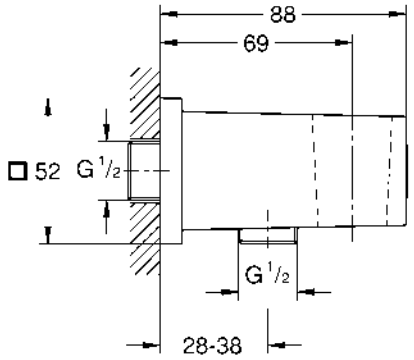

26 396
27 693
27 706

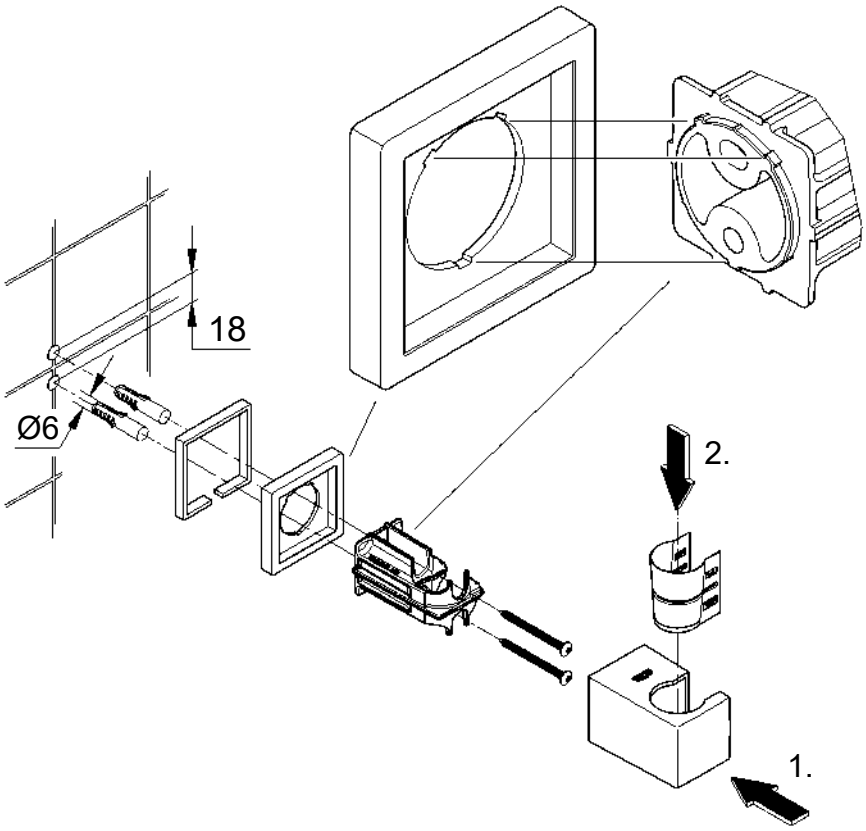

1

26 370

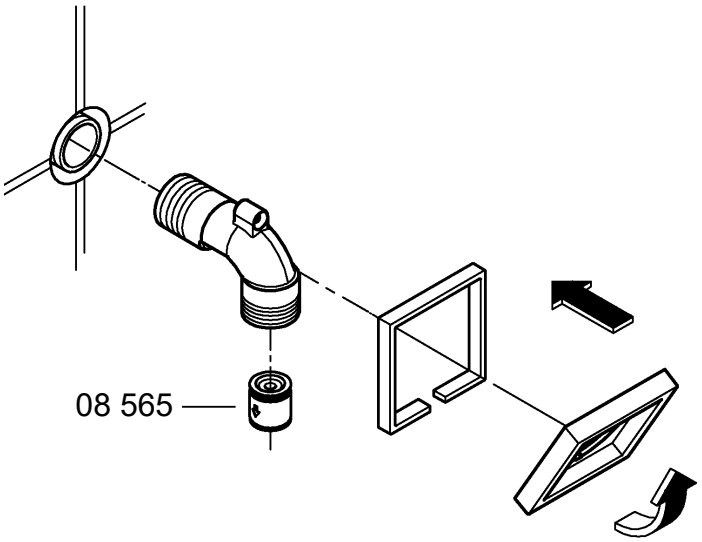

2

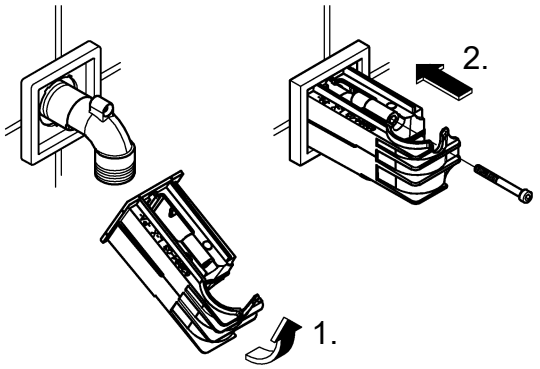
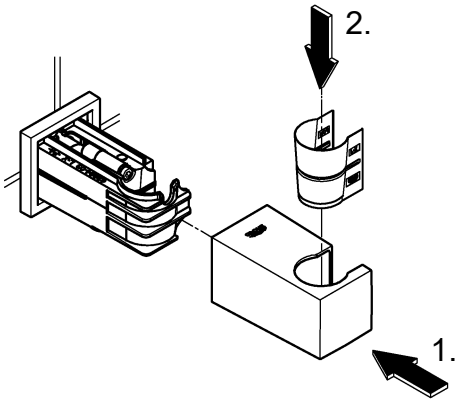
3